RF-2.75 Plasma Source

Description

- The RF-2.75 Compact RF Plasma Source is excellent for oxide and nitride deposition.
- The RF Plasma Source and manually tuned RF matching network mounts to a standard 2.75" CF (70 mm) Flange.
- Equipped with an optical viewport, the RF-2.75 Plasma Source is fully compatible with SVT Associates' RoboRF Automation Software.
- The integrated charge suppression ensures that ions do not reach the target and also eliminates substrate damage due to unintentional sputtering.

Features

- Compact Design
- Integrated Charge Suppression
- Automatic Tuning Network Available
- Optical Port for Plasma Monitoring
- Integral Water Cooling
- Custom Plasma Chamber and Aperture Available

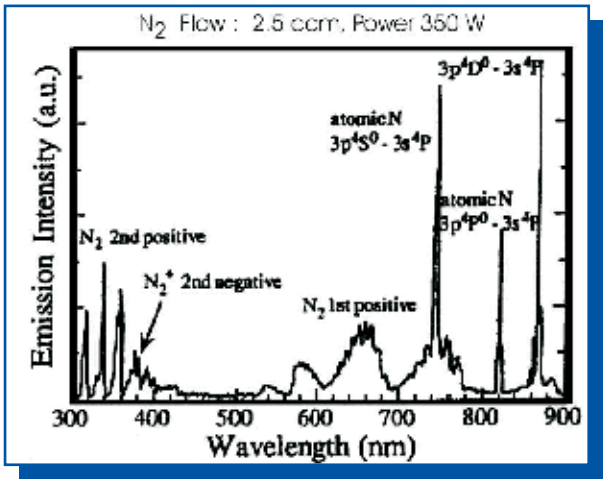

Nitrogen Plasma Emission Spectra of the SVTA-RF-2.75 Plasma Source

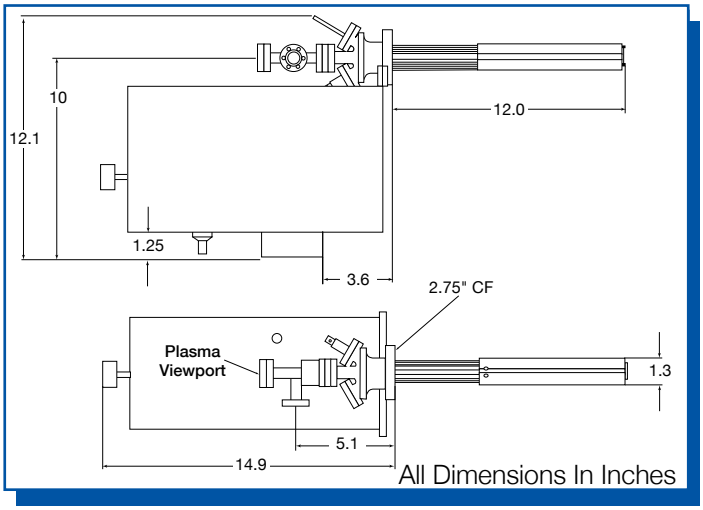

Specifications

RF Power Level	150 – 400 Watts
Gas Flow Rate	0.1 – 5 SCCM
Flange	2.75" CF
Source Diameter	1.30"
Water Cooling	0.17 GPM Flow Rate
RF Matching Network	Manually Tuned
Plasma Chamber	PBN, Alumina, or Quartz

Models	Description
SVTA-RF-2.75PBN	PBN, 0.11" Aperture
SVTA-RF-2.75ALO	Alumina, 0.11" Aperture
SVTA-RF-2.75Q	Quartz, 0.11" Aperture

7620 Executive Drive | Eden Prairie, MN 55344-3677 | USA
Phone: 952-934-2100 | Fax: 952-934-2737 | Email: sales@svta.com | www.svta.com

RF-4.5 Plasma Source

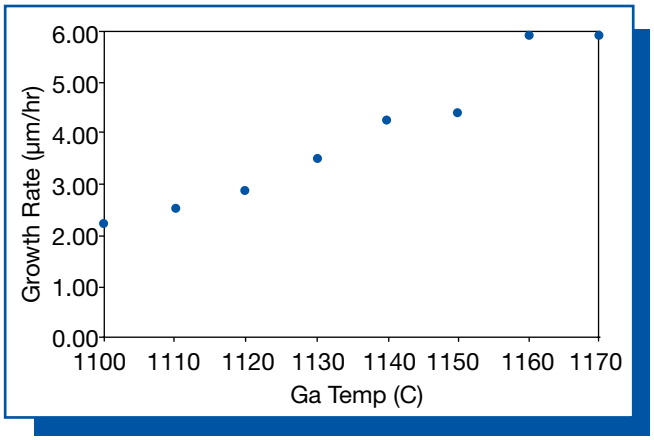

GaN Growth rate of SVT Associates RF-4.53 Plasma Source in a SVT Associates III/V MBE System *(See Application Note 1001)*

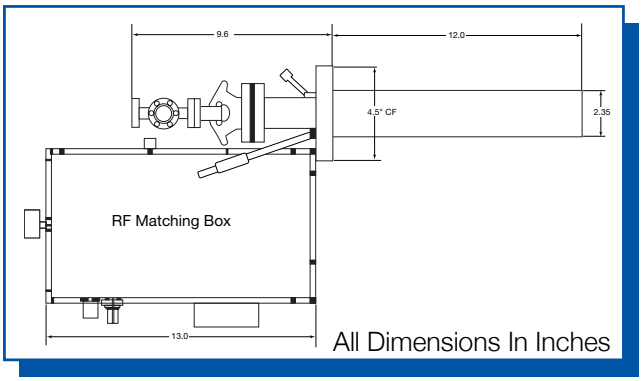

Description

- SVT Associates RF-4.5 Plasma Source is designed to dissociate diatomic nitrogen, oxygen, and hydrogen without producing high energy ions.
- The "zero" ion content flux allows for high quality growths as well as cleaning of substrates for thin film deposition without damaging the surface.
- SVT Associates RF-4.53 High Growth Rate Plasma Source is able to produce high quality growth rates greater than 4 µm/hr *(See Application Note 1001)*.
- Custom aperture and chamber designs are available upon request to tailor the flux to individual applications.
- Optional equipment such as RoboRF provide automated operation and allow the user to log data, as well as write recipes for reproducible growths.

Features

- N_2, O_2, and H_2 Models Available
- Growth Rates Up to 4 µm/hr
- Optical Port for Plasma Monitoring
- Custom Shaped Plasma Chamber and Apertures Available
- Automatic Tuning Network Available

Specifications

RF Power Level	200 – 600 Watts
Gas Flow Rate	0.1 – 5 SCCM
Flange	4.50" CF
Source Diameter	2.35"
Water Cooling	0.17 GPM Flow Rate
RF Matching Network	Manually Tuned Auto Tuning Optional
Plasma Chamber	PBN, Alumina, or Quartz

Models	Description
SVTA-RF-4.5PBN	PBN, 0.11" Aperture, Specify Length: 12" – 20"
SVTA-RF-4.5ALO	Alumina, 0.11" Aperture, Specify Length: 12" – 20"
SVTA-RF-4.5Q	Quartz Plasma Chamber, 0.11" Diameter Fused Hole
SVTA-RF-4.53	High Growth Rate Model

©2011 SVT Associates, Inc. All Rights Reserved.

RF-6.02 Plasma Source

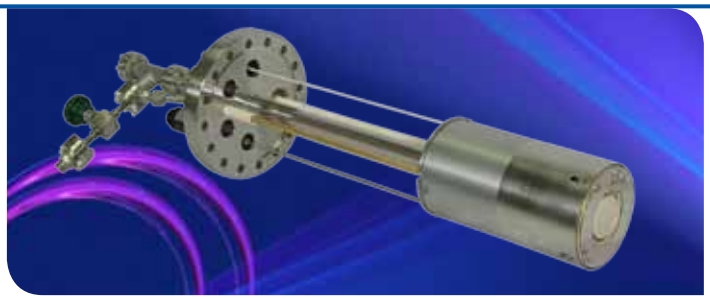

Description

- The RF-6.02 is designed for high volume and large wafer size production systems for nitride and oxide thin film growth.
- Integrated Charge Suppression eliminates the high energy ions from the flux and reduces substrate sputtering.
- The large distribution area of the RF-6.02 is ideal for wafer sizes of 4" or larger.
- With efficient radical generation growth rates greater than 6 µm/hr are achieved under optimal growth conditions.

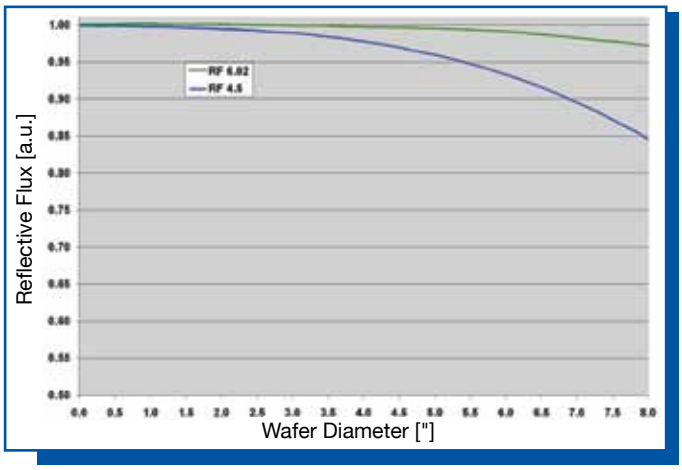

Relative Flux Distribution of the SVTA-RF-4.5 and SVTA-RF-6.02

Features

- For N_2, O_2, and H_2
- Growth Rates Up to 6 µm/hr
- Flux Uniformity for Wafer Sizes Up to 8" Diameter
- Optical Port for Plasma Monitoring
- Custom Plasma Chamber and Apertures
- Automatic Tuning Matching Network
- Charge Suppression
- Fully Automated Plasma Source with Safety InterLock

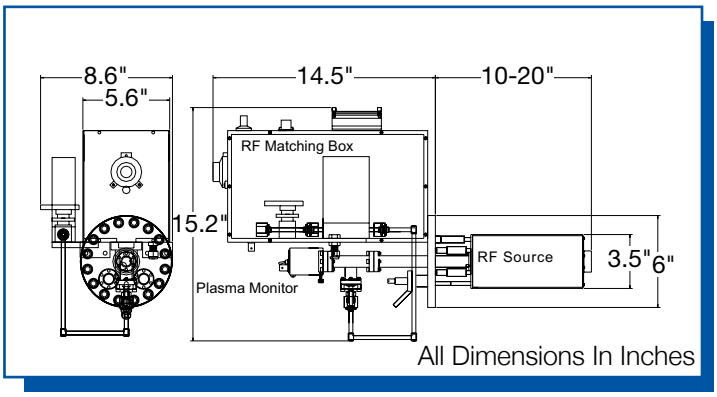

Specifications

RF Power Level	200 – 2,000 Watts
Gas Flow Rate	0.1 – 10 SCCM
Flange	6.0" CF
Source Diameter	3.50" (89 mm)
Water Cooling	0.5 GPM
Source to Target Distance (Typical)	10.5"
Plasma Chamber	PBN, Alumina

Models	Description
SVTA-RF-6.02PBN	PBN, Specify Length: 10" – 20"
SVTA-RF-6.02ALO	Alumina, Specify Length: 10" – 20"

7620 Executive Drive | Eden Prairie, MN 55344-3677 | USA
Phone: 952-934-2100 | Fax: 952-934-2737 | Email: sales@svta.com | www.svta.com